IEEE CIRCUIT

The Institute of Electrical and Electronics Engineers, Inc.

VOLUME 49 Issue 2 **June 2022**

Secretariat

AUSTRALIAN PROFESSIONAL CENTRE
PO Box 576
CROWS NEST NSW 1585
Tel: +61 2 94318600

IEEE NEW SOUTH WALES SECTION
ARBN 078 576 495 ABN 34 078 576 495

Editor: Bill Sloman
e-mail: bill.sloman@ieee.org
Web page:
http://sites.ieee.org/nsw/

Contents:

Editorial:

This would be the twenty-third newsletter I've edited if I got to edit it. My family circumstances have got in the way of my doing much of the editing.

This continues to report our activities as the corona virus epidemic dies down. There haven't been many of them, since we exist to bring people together and this isn't a good idea even near the end of an epidemic, but Unite 2022 has been set up and should happen

Chairman's Message

The world is now learning to live with COVID. People are now travelling and gathering again and it is not expected that there will be any more lock downs in Australia. Our networking activities are starting up again but I believe it will be some time before our face to face activities are back to pre-COVID numbers, if ever. Now that we have seen what technology can do, we will always be trying to put a virtual component into future activities. I do have a concern that without networking the Section will not provide the events that members want. Often overhearing someone's casual comment sparks an idea or gives you a lead to a possible event. I am always asking for suggestions but rarely, if ever, receive any.

I have been organising luncheons at various locations. Currently, they are on hold as I do not have the time to check out venues. May be some of you could suggest venues for luncheon or dinner. It is amazing what opportunities can arise from these gatherings.

It is the time of year when the Section calls for nominations for the 2023 Section Committee. There are further details in this issue. If you wish to be on the committee of a Chapter or Group, then contact them, as they elect their executive independently to the Section.
The section and Groups are always looking for volunteers for positions.
The Section is currently looking for a Secretary. Tony Zaglas is currently acting but is eagerly waiting for someone to take over or be trained, so he can concentrate on his other roles.
If you would like to be involved in the running of the Section but do not want a nominated position, please let us know. All the officers on the committee would welcome people to assist them. A number of officers hold two or more positions because we do not have enough volunteers.
Please consider joining a committee or being actively involved. Think about the contacts you can make and the opportunities that can arise.

The Section presents awards annually for the Outstanding Volunteer in various categories. Nominations for these awards are currently open and details can be found in this issue and on the website. Do you know someone who deserve such an award? Please nomination them.

There are two Section activities organised for the coming months: -

UNITE 2022 on Friday 8 July at Mercure Hotel. This will be a great opportunity to network and find more about what the Section and Chapters and Groups can offer.
There is no charge for Unite 2022, but numbers are limited so register now.
The Region 10 Director, Deepak Mathur, will be attending. From Sydney, he is going to Canberra where a tree (Mesa oak) will be planted at the National Arboretum with the inscription 'dedicated to IEEE members and volunteers, whose passion is to thrive for technological excellence to serve humanity'.

50th Anniversary Dinner on Friday 19 August at Novotel, Darling Harbour.
The History Committee has organised a three-course dinner with all the trimmings and minimum of speeches. The cost of the event is $70 per person which includes a printed book of the history of the Section, which is not all dry facts.
Keep a lookout for an eNotice with the booking details.

It is now 50 years since the first Australian Section was formed on 16 August 1972, which became NSW Section when other Australian Sections were formed. The Section was petitioned by a group of power related engineers in NSW. At that time, there was no group in Australia that gave this group a forum to consider technical issues. Those in the communications and electronics fields had the IREE (Institution of Radio and Electronic Engineers(Aust)), of which I was a member till its demise in 2000. I joined IEEE in 1978 for its technical journals.

Further details of these activities can be founded in articles in this issue.

Hope to see you at these or other activities.

Regards,
Colin Elston
Chair
IEEE NSW Section

Old editions of CIRCUIT

The NSW Section's webpage has editions of CIRCUIT dating back to 2001. The Committee is endeavouring to collect and post on the website as many editions of the Newsletter as can be found right back to the formation of the Section in August 1972. If members have copies of CIRCUIT, in particular the early years(1970s to 1990s) they should contact me. PDF copies of the Newsletter are desirable and if members need help in scanning and converting hard copies please contact me or the History Committee.

Tony Zaglas
IEEE NSW Section Secretary

Australia/NSW Section Achievements

The IEEE NSW Section has the honour of celebrating the "golden" anniversary of the launch of IEEE local activities in Australia. The IEEE Australia Section was founded on August 16, 1972, headquartered in Sydney. In December 1985 the Australia Section was renamed as the NSW Section, after separate Sections were formed in some other Australian States.

This August 16, 2022 is 50th Anniversary, not just of the establishment of the IEEE NSW Section, but - more significantly – of the inauguration of IEEE local presence in Australia as whole. As the IEEE is the world's largest technical professional organisation, committed to advancing technology for the benefit of humanity, the IEEE NSW Section has been honoured to have been the flag-bearer for IEEE activities in Australia for half a century.

This 50th anniversary is a good opportunity to review and appreciate the positive impact that the formation of the IEEE Australia/NSW Section has had on the electrical engineering profession in Australia during its 50 years of existence. The IEEE local presence has made it much easier to access the wealth of technical information, professional, educational and networking opportunities, that IEEE presents.

More specifically the IEEE local presence has contributed to Australian electrical engineering in a number of ways.

Attracting International Conferences to Australia:

What immediately comes to mind is the way it has helped to attracted prestigious IEEE conferences to Australia. We've attracted quite a few. When the Australia Section was founded, this wasn't an option and it took a while before our efforts to attract an important IEEE conference to Australia paid off. Without a local Section there wouldn't have been anybody around to put in the effort.

The prize example is GLOBECOM 98, the IEEE Communications Society's flagship conference, which Sydney hosted in 1998, through the efforts of the NSW Comms/SP Chapter and the NSW Section. It was enormously successful and became the biggest IEEE conference to be held in Australia for a long time; in fact, the biggest telecommunications conference in Australia up to that time and since. Its success provided a big input to Australian communications researchers and industry. It also put a lot of money into the IEEE NSW Section bank account which had long been teetering on the border between black and red. The NSW Section has never looked back. None of this would have been possible without an IEEE local presence, whose members worked very hard to achieve such an outstanding outcome.

Distinguished Lecturer Program:

Bringing distinguished IEEE lecturers to Australia is another important program that is of great value to members. There have been many eminent electrical engineers who have come to Australia on behalf of the IEEE, presenting excellent lectures to members on important topics. If there hadn't been a local IEEE Section, we couldn't have invited them – at least not on the basis of their eminence in the IEEE.

IEEE Milestones:

The IEEE Milestones are the world's most significant program for recognising important achievements in the electrical, electronic and computing fields. Australia's first IEEE Milestone was unveiled in October 2019 at the Parkes radio telescope, for its role in receiving the signals from the moon during the first human moon landing in August 1969. It is hard to see how the recognition of a local Milestone could have been achieved, if there hadn't been a local NSW Section to support it.

Empowering Australian electrical engineers to have an impact in scientific affairs internationally:

Our NSW Section members have made notable contributions to the governance of IEEE, the world's technical professional organisation. NSW Section has provided IEEE Asia-Pacific (Region 10) Directors, Presidents of IEEE Societies, Editors of IEEE Journals, its members contributed to the organisation of international IEEE conferences. The local section has encouraged them to route their efforts in scientific affairs internationally through the IEEE.

Raising the Profile of the Electrical Engineering Profession:

A local IEEE presence provides an incentive and motivation for members to interact with local technical and non-technical communities, and creates opportunities for such interactions to occur and provides a route through which they can draw upon the wealth of IEEE technical knowledge to disseminate it locally. All such activities and interactions inevitably raise the profile of the electrical engineering profession within the community.

Ramutis Zakarevicius,
Chair, History Committee

50 Years Young and Still Going Strong!

Did you know that the IEEE NSW Section turns 50 years "young" this year?
Such a momentous Golden Anniversary deserves to be celebrated!

And It Will Be!!!

You are Invited to Join Us
To Celebrate the IEEE NSW Section 50th Anniversary

over a superb dinner experience with IEEE colleagues, and other professionals

on Friday, ***19th August 2022,***
at the ***Novatel Sydney Darling Harbour****.*

The celebration features dinner that starts with a welcome reception, pre-dinner cocktails, followed by a delicious three course meal, and some brief speeches. Drinks will be served throughout the evening,

It will provide the occasion to meet up with old friends, make new ones, in a friendly and spectacular setting which Sydney is famous for.

The IEEE NSW Section subsidises the function and cost for each person is only $70!!!

Make up a table with friends and colleagues.

Colin Elston, Section Chair

For tickets, TBA

Dress Code: Lounge suit

Extending the Lifetime of Power Electronic Converters

Summary of a keynote address delivered at IEEE Technically Co-sponsored 3rd International Conference on Electrical and Electronic Engineering (ICEEE) 2021, Bangladesh

This bi-annual conference, which is organized and run by the electrical and electronic engineering (EEE) department of the Rajshahi University of Engineering & Technology, Bangladesh, serves as a forum in which academics, engineers, professionals, researchers, specialists, and students share and exchange ideas on the rapid strides and technological advancements in EEE in recent years.

I was invited to give a keynote speech on my recent research work on extending the lifetime of power electronic converters which is funded in part by the Australian Research Council Discovery Project schemes (under project number DP210101382).

Our society is becoming progressively more electrified, so that most of our activities depend on electric power delivered in different forms. Power electronics is a key enabling technology for rapid translation and transformation – Photovoltaic inverters, superfast Electric Vehicle battery chargers, uninterruptible power supplies, variable speed drives (for washing machines, air-conditioning, electric vehicles, etc.), wireless power transfer and charging, solid-state transformers (for substations), to just name a few.

The penetration and scale of renewable power sources and energy storage systems has increased dramatically in recent years. In terms of solar PV installations, Australia achieved over 26.1 gigawatts of combined capacity as of 31 March 2022[1], which shows a steady growth of 4.5 gigawatts installed capacity per annum since 2018. There are also big battery (hundreds of MWh) installations and trials in different states of Australia [2]. As there is a significant increase in the proportion of electricity being processed and managed by power electronic-based inverters and converters in both large-scale, and local and distributed generators, we need to examine both system strength and reliability, as these are two key factors for the sustainable energy transition. In this talk, I focused on the latter aspect of power electronic converters (PECs).

Traditionally, electricity was generated mainly from coal-fired or gas-fired power plants from which electricity was transmitted along very long high voltage transmission lines, then distributed locally from transformers, through shorter, lower-voltage cables. The reliability of electric power supply depends on power demand and supply control, mitigating faults and managing these aging assets. Power electronic systems, around which the renewable energy and energy storage systems are built, pose different reliability problems as they are mainly built with solid-state electronics.

Although there are some standard designs for PECs, every application is unique in terms of electrical specifications, thermal management, mechanical dimensions, working conditions, cost constraints, etc. It is impossible to have a one-size-fits-all design for all power electronic applications. In addition, thanks to the advances in microelectronics, such as new wide-band-gap devices, and new semiconductor packaging techniques, the power density of power electronic systems continues to rise, which further reduces system cost and accelerates system integration. It is common to see industry standards being revised and updated regularly as we gain more experience in managing electric power via power-electronic-based converters and have to deal with evolving power applications and associated requirements and environment. For example, IEC 63002:2021 was revised recently to provide common charging interoperability guidelines for power sources to reduce the number of different types of chargers and hence e-waste production, IEEE 1547a-2020 has revised the range of trip clearing times to broaden and simplify the adoption of the standard when the inverters operate under abnormal conditions, etc. All these scenarios inevitably drive power electronics designers to modify existing designs and sometimes to re-design the power converters and

[1] https://pv-map.apvi.org.au/analyses

[2] https://arena.gov.au/renewable-energy/battery-storage/

adopt different control strategies. Converter reliability is also altered when a new device is used or when the design and control of PECs are updated and modified.

Compared with electric motors, PV panels, and even batteries, PECs converters generally have a relatively short lifespan. The power transistors, electrolytic capacitors, and PCBs are identified as the weaker components in power converters[3] due to progressive aging as they are exposed to constant power cycling and temperature cycling through fast switching actions and dynamic system behaviour. Not only does the limited lifetime of PECs increase the operating and maintenance costs of the power system but it also accelerates e-waste production if they are not properly recycled, re-purposed or re-used. This has motivated people to assess and improve the reliability of PECs. The objectives of this Keynote Speech are to discuss (1) the causes of PEC aging and failure, (2) methods of detecting the failures, (3) strategies to extend the lifetime of PECs and (4) some potential research topics in this area.

Causes of PEC aging and failure

The primary contributing factors for PEC aging and failure are working conditions (electrical and thermal), PEC circuitry, component selection, control and modulation, and protection features. This talk assumes standard working conditions (i.e., room temperature and open-frame housing), standard operating conditions (i.e., power rating and input voltage), and standard protection circuitry, to focus on investigating the effects of different converter structures, components and control strategies on PEC failure and reliability. To estimate converter reliability, the military handbook MIL-HDBK-217F was chosen for the study. Although it doesn't cover thermal cycling and some recent power devices such as IGBTs, it is still useful for steady-state reliability analysis of MOSFETs and other common components.

A typical step-up boost converter is selected as a starting point of discussion as it is commonly used in solar PV systems, ac adaptors, electric vehicles, etc. In the assessment of component reliability, the MIL-HDBK-217F standard covers both electrical and thermal stresses such as applied voltage and device temperature and the properties of the materials of the devices. The key components under study are input and output capacitors, the boost inductor, the MOSFET, and the output diode. Different variations of boost converters have been assessed and compared. All of them used the same brands and types of semiconductors and the same values of passive components (i.e., capacitance and inductance). The circuits are simulated and their associated voltage stresses and power losses are recorded. The recorded data points are used as part of the reliability calculation of mean-time-to-failure (MTTF).

There are several findings from this study:

- For a given input voltage and output power, a larger voltage conversion ratio tends to increase the failure rates of the MOSFET and output diode.
- Better power transistors reduce the transistor failure rate and the failure rates of power components that share the same current paths with the transistor, and vice versa.
- A tri-state boost converter, which adopts the half-bridge structure, has the highest MTTF value due to lower voltage stresses on the power MOSFETs and output capacitors.
- The total number of components in a power converter does not necessarily correlate with the failure rate but rather the number of components in any active current path involved in the switching action provides more insight into the converter failure rate.

[3] J. Falck, C. Felgemacher, A. Rojko, M. Liserre and P. Zacharias, "Reliability of Power Electronic Systems: An Industry Perspective," in *IEEE Industrial Electronics Magazine*, vol. 12, no. 2, pp. 24-35, June 2018, doi: 10.1109/MIE.2018.2825481.

Methods to detect PEC failure

While it is helpful to use some industry or military standards to assess the PEC reliability during the design phase, the PECs are used under dynamic working conditions in real applications. This induces both overstress failures and accumulated component stress on individual devices in the PEC circuit. Some form of dynamic assessment of PEC reliability during the design phase would help identify the aging processes going on in the circuit. The physics-of-failure (PoF) approach has been applied to the reliability study of PECs. It takes into account the materials, defects and stresses active in the converter's designated operating scenarios - the so-called mission profile - and uses appropriate failure probability density distributions to generate more reliable PEC designs. We have developed a MOSFET model that contains an electrothermal averaged sub-model, an aging sub-model and a lifetime analytic sub-model, which can run in SPICE circuit simulators such as LTSpice®[4]. The on-resistance of the MOSFET serves as an indicator of the aging process and as a failure precursor. A basic boost converter subjected to a 10-year random mission profile is used to demonstrate the aging process of a MOSFET from both thermal and electrical perspectives (interaction and feedback between thermal and electrical properties of the MOSFET are embedded in the model). The ultimate goal is to develop a comprehensive aging model that covers key power devices in the PEC to make it possible to predict a realistic failure rate for the simulated environment. That would let us refine the design to extend the lifetime of a PEC.

The discussion so far is based on the design phase. When the PEC has operated for long enough, it will eventually fail.

Another key activity in the PEC reliability study is to look at a failure in the hardware and work out how the device or circuit actually failed, i.e., fault diagnosis. As shown in Figure 1, there are fault diagnosis sensors that are used to identify a fault pattern through a fault-tolerant processing unit. For semiconductors, their fault conditions can be categorized into short-circuit faults and open-circuit faults. Both faults can damage both the PEC internal circuitry and externally connected power sources, loads, and equipment. The next step after a fault is detected is to isolate the fault within the PEC circuit. It can be implemented by a fuse, or in some situations another semiconductor switch. The latter would require some electrical and temperature sensors and a fast-processing controller to activate the isolation quickly. This can simply be implemented based on the existing PEC setup.

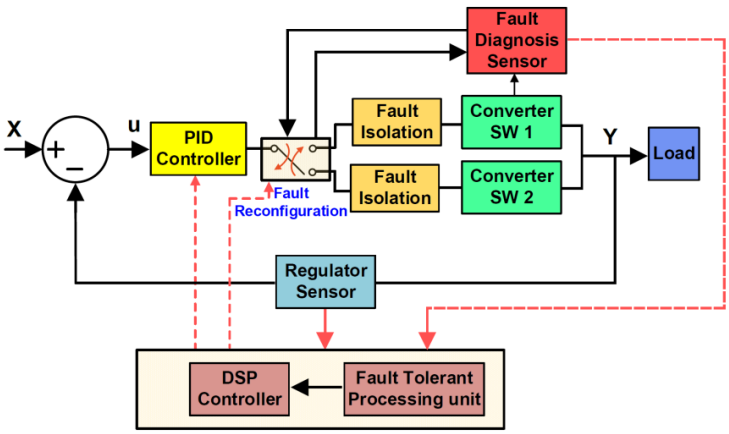

Figure 1 Block diagrams showing a general idea of fault detection, isolation and reconfiguration on a power-electronic converter (PEC)[5]

[4] T. Cheng, D.D.-C. Lu, and Y. Siwakoti, "A MOSFET SPICE Model with Integrated Electro-Thermal Averaged Modeling, Aging, and Lifetime Estimation," *IEEE Access*, Vol. 9, pp. 5545-5554, 2021.

[5] J.L Soon, "Fault-Tolerant Design and Implementation for Non-Isolated Reconfigurable DC/DC Converters," Ph. D. dissertation, School of Electrical and Information Engineering, The University of Sydney, Australia, 2019. Available [Online] https://ses.library.usyd.edu.au/handle/2123/20266

Strategies to extend the lifetime of PECs

The last part of the study seeks to find ways to extend the operation of the PECs even when some faults have occurred. This is critical for certain applications such as aviation and medical implanted devices. The main way to extend the PEC operation is to provide a certain amount of redundancy within the system. If there are sufficient margins in space and cost, having several identical PEC modules is the best option. These modules are inserted in parallel with all other modules and stay in standby or idle mode when the power system is healthy. When one of the active modules fails, the standby module activates swiftly to maintain system operation and sustain the power.

There are, however, other applications where system miniaturisation is a key design aim as in lightweight aviation, such as unmanned aerial vehicles (UAVs), and in mobile/portable electronic devices. For these applications, one solution is to add PEC redundancy at the circuit level. The general principle is to create an alternative current path when one power semiconductor has failed, which is called fault reconfiguration, the last stage in the fault-tolerant operation of PECs. For two-level PECs, an additional power transistor branch is required to create this path[6]. For multilevel PECs, it is much easier to create alternative current paths which can let the circuit keep working after more than one power semiconductor has failed. This happens because there are already several switches in those PECs and there is usually more than one switching pattern (involving different power semiconductors) that can generate the same voltage level[7].

From the thermal management perspective, there are various ways to extend the lifetime of a PEC. Heat sinks are commonly fixed onto power semiconductors to let them dissipate more power without forcing the junction temperature to become dangerously high. This is a passive thermal management solution. Active thermal management solutions are fan cooling and water/liquid cooling to let the heat sink dissipate more power at a given surface temperature. This is manipulating the thermal resistances between the device junction and the outer world to hold the device junction within the safe operating temperature range. For a given device's power consumption, a lower junction temperature means a lower failure rate. While passive and active thermal management is implemented mechanically, it can also be manipulated electrically. As PECs are characterized by the fast switching of power semiconductors and their associated circuitry, a rule of thumb for implementing active thermal management electrically is to switch the power semiconductors less frequently while maintaining similar power supply functionality (e.g., the output voltage of the PEC remains steady even when active thermal management is activated, power losses are redistributed among power switches based on the aging of individual switches, etc.).

[6] D.D.C. Lu, J.L. Soon, and D. Verstraete, "Derivation of Dual-Switch Step-Down DC/DC Converters with Fault-Tolerant Capability," *IEEE Transactions on Power Electronics*, Vol. 31, No. 9, pp. 6064-6068, September 2016.

[7] H. Mhiesan, A. Mantooth and Y. P. Siwakoti, "A Fault-Tolerant Hybrid Cascaded H-Bridge Topology," *2019 IEEE Energy Conversion Congress and Exposition (ECCE)*, 2019, pp. 6376-6381, doi: 10.1109/ECCE.2019.8912836.

Some potential research topics in this area

Reliability analysis of PEC is a multi-disciplinary subject. It requires an understanding of the aging processes in microelectronics, of electrical engineering, of mechanical engineering, of chemical engineering and does take in other perspectives as well. We will need more advanced and accurate modelling techniques to conduct deeper reliability analyses at several levels. This will probably involve a combination of field data, device modelling and machine learning. PECs have gone from a purely repetitive power conversion interface to more complicated devices supporting a smart diagnosis and control centre to offer integrated fault-tolerant operation. Much work still needs to be done to improve the reliability of PECs, and I invite you to join this exciting work.

Acknowledgement: I would like to thank Dr Hamzeh Aljarajreh, Mr Majid Farhangi, Mr Yaroslav Syasegov, Mr Muhammad Mubashir Alam, Mr Antony Zaglas, and Mr Anthony William Sloman for their feedback and discussion on this summary.

Contributed by Professor Dylan Lu (UTS)

Chair of IEEE NSW Joint Chapter

Industrial Electronics, Industry Applications and Power Electronics

Contact: dylandclu@ieee.org

IEEE NSW UNITE2022 – It's back!

8th of July 2022 and it is FREE for IEEE Members (all grades)

Explore the program, speakers and opportunities:

https://attend.ieee.org/nswunite-2022/

	Professional Development Stream	Multidisciplinary Stream	Electrical Stream	Sensors & Smart Cities Stream	Communications & Computing Stream
2:00-2:30pm	Registration				
2:30-3:10pm A	Professional Development Skills for Career Success for Students, Young Professionals & Women in Engineering	Hybrid approaches to teaching reliability and statistics to engineering students	The in-orbit economy: life-cycle of satellites and other infrastructure in space	Electron Devices Presentations	Recent trends in 5G MMIC designs
3:15-3:55pm B		Understanding the patent application process	Technologies for the future low voltage distribution networks	VTS talks on Trusted and Connected Intelligence	
4:00-4:40pm C	Career Limiting Beliefs: Understanding Emotional Intelligence	50 Years of IEEE	Solid State Transformer for Future Grids	Sensor Council Presentations	Responsible Data Sciences
4:40-5:00PM	Afternoon Tea				
5:00-5:40pm D	Linkedin - Career Success	Panel Session: High Impact Research	Panel Session: Future Grids	Panel Session: Sensors & Smart Cities	Panel Session: Big Data, Machine Learning & Artificial Int
5:45-6:30pm E	Maximising Professional Development Opportunities with the IEEE				
6:30pm- 9pm	Dinner, NSW Awards, Networking and Student Poster Comp				

About UNITE 2022

IEEE NSW UNITE2022 is a unification event of all chapters, affinity groups and members.
UNITE first took place in 2018 and was repeated in 2019. Unfortunately, due to COVID19, the event was cancelled in 2020 and 2021. In 2022 we hope to re-establish momentum and bring all our members together again.
This event unites all NSW IEEE Members (Student, Young Professional, Women In Engineering, Life Members, Academia & Industry etc.) in one place with free food, exhibits, technical talks, professional development workshops and networking, with a goal of making the most of what can be got from the IEEE. Discover the latest trends, discover the opportunities provided by the various IEEE societies, discuss membership elevation options, engage with TISP and much more!

UNITE is FREE for IEEE Members (first 250 to register) and is a way for the NSW Section to provide its members a valuable service in recognition of the fees paid. The greatest benefit of the IEEE comes from networking and knowledge sharing. Therefore, if you are a member don't miss out on the opportunity. Get involved and participate!

IEEE NSW UNITE2022 will be held at the Mercure Sydney on Friday the 8th of July as a face to face event. There will be no hybrid access. The goal is to reconnect members and to allow us to network in a way that online systems have not allowed during the last two years of lockdown.
First sessions start at 2:30pm and the event will close at 9pm.
Registration is compulsory and free registration will be provided on a first come, first served basis.
Registration includes:

- Access to all talks and workshops
- Access to the networking component
- Free food during networking component (limited time only)

I encourage all members to take advantage and participate.

Regards
Sasha Nikolic
Chair, IEEE NSW UNITE2022

ICST'15

Sydney

15th International Conference on Sensing Technology, ICST'15

Dec. 5 to 7, 2022, Sydney, Australia

Macquarie University, Sydney, Australia is pleased to announce that the 15th International Conference on Sensing Technology (ICST'15) will be held during December 5 to 7, 2022 at Macquarie University, Sydney, Australia. ICST'15 is intended to provide a common forum for researchers, scientists, engineers and practitioners throughout the world to present their latest research findings, developments and applications in the area of sensing technology. ICST'15 will include keynote addresses by eminent scientists as well as special, regular and poster sessions. All papers will be peer reviewed on the basis of a full-length manuscript and acceptance will be based on quality, originality and relevance.

Important Dates:

Manuscript Submission	15th July 2022 Acceptance Notification
	30th August 2022 Camera Ready
Submission	30th September 2022Advance
Registration	30th September 2022

Please submission: Please submit extended abstract or full paper via

https://edas.info/newPaper.php?c=29379

The website of the conference is

https://icst2022iitm.in/sydney/

IEEE NSW Section Nominations 2022

IEEE NSW Section Committee – Nomination

The nomination/nominee form should be e-mailed to Mahmoud Elkhodr at elkhodr@gmail.com and cc Antony Zaglas antonyz@ieee.org and must be received no later than **31 August 2022**.

Before completing the form and returning, please review the following guidelines for nominating a volunteer Candidate:

(a) Nominators must contact their nominee before submitting the form and confirm their acceptance of the time & other commitments required for the position.

(b) Nominees must have had at least 2 years on the Committee to nominate for the key positions of Chair, Vice Chair, Treasurer and Secretary.

(c) Self nominations require the submission of additional information e.g. CV or SMIEEE referee.

(d) If you are nominating for more than one position, separate forms must be submitted.

(e) Any other queries should be emailed to elkhodr@gmail.com and cc antonyz@ieee.org.

Nominee Contact Information

Nominated Position: _____

First Name: _____

Surname: _____

Email Address _____

Postal Address _____

_____ Post Code _____

IEEE Member No: _____

Achievements: (For the past 10 years within and without IEEE)

_____

_____

_____

_____

Nominator Contact Information

First Name: _____

Surname: _____

Email Address _____

Postal Address _____

_____ Post Code _____

IEEE Member No: _____

IEEE NSW Section Outstanding Volunteer Awards 2022

The IEEE NSW Section in 2018 ran the inaugural IEEE NSW Outstanding Volunteer Awards.
This year the Awards include;

- IEEE NSW Outstanding Volunteer
- IEEE NSW Outstanding Young Professional Volunteer
- IEEE NSW Outstanding Women In Engineering Volunteer
- IEEE NSW Outstanding Student Volunteer

More information as well as the Awards Policy and Nomination Form can be accessed at http://sites.ieee.org/nsw/awards-recognition/

Nominations will close on 31 August 2022.

Tony Zaglas
IEEE NSW Section Awards and Recognition Chair

New and Upgraded Members.

For the period from the 1st February 2022 to the 31st May 2022.

New Fellows

None

New Life Fellows

We have just one. Prof Branka Vucetic

New Life Senior Members

We don't have any new life senior members.

New Life Members

We have three new life members.
Basil Borun, David Coward and Dr John Edler

New Senior Members

We have 34 new senior members.

Arti		Agrawal
Mir	Nahidul	Ambia
Samuel	K	Calder
Robert		Carman
Hoang	Thai	Dinh
N	C	Harsha
Md. Rabiul		Islam
Sanjay	K	Jha
Ali		Lalbakhsh
Ho Pun		Lam
Gang		Lei
Justin		Lipman
Junwei		Liu
Haiyan		Lu
Mehregan		Mahdavi
Herbert	Francis	Mailey
Budhaditya		Majumdar
Alistair		Mc Ewan
Steven	R	Meikle
Andrew	F	Myles
Tuan Nghia		Nguyen
Hye-Young		Paik
Cibby	B	Pulikkaseril
JING		QIU
AARON	J	QUIGLEY
Aras		Sheikhi
Haifeng		Shen
Mohit	Naresh	Shivdasani
Weidong		Su
Elena		Vlahu-Gjorgievska
Chandana	Prasad	Withana
Lina		Yao
Basit	Ali	Zeb
LUPING		ZHOU

New Members

We have 115 new members

Waqas	Ahmed Khan	Afridi	Haider		Ali
Ashek		Ahmmed	SYED	Z	ARSHAD
Fowzia		Akhter	Alpha		Bah
Md	Zahangir	Alam	Ali		Bakhshi
Ismail	Mohamed	Ali	Keith	W	Bannister

Julie	Stephany	Berrio Perez	David	Lawrence	Marsh
Michael		Bewong	Neeraj		Mathur
MICHAEL	J	BOERS	Andrew	N	Mears
Paul	P	Breen	Enomal		Mendis
Anna		Bruce	Deepak		Mishra
Scott		Bulliman	Graham	A	Murdoch
Scott		Calvert	Achut	K	Myneni
Verity	Ann	Carney	Mehdi		Nobakht
Richard	James	Cartwright	Shaun	Anthony	Owen
Sudipta		Chakraborty	Maurice		Pagnucco
Monte		Chan	zengxi		pan
Edward		Cheng	Brent		Pawlik
Nicholas		Chetty	Mamoud	R	Payam
Andrew		Chia	Tee Howe		Peh
Chee	Mun	Chong	Aaron	Thomas	Pereira
Chris	C	Constance	Marcena H		Phan
Dean	A	Cooper	Samir		Pizovic
Nguyen	Dinh	Cung	Simon	K	Poon
Peter		Curran	Aiswarya		Pradeepkumar
Howard		Elliott	Roshan		Punnoose
Muhammad	Hamza	Ghazanfar	Zihang		Qiu
Pradip	K	Goon	Raad	S	Raad
Swaroop		Gopalam	Md. Ashib		Rahman
Julian		Grodzicky	Philip	Thomas	Reilly
Mandar	L	Gujrathi	Brian		Rippeto
Chris		Halliday	Maitreyee		Roy
Jason		Hambly	Harinder		Saluja
Jialuo		Han	E J Zinat M.		Sathi
James	C	Herbert	Matthew		Scott
Lakitha	Sahan	Hettiarachchi	Pankaj	Kumar	Sharma
Andrew		Hill	Li		ShuangYang
ADRIAN		HOBBS	Khushboo		Singh
Huaxi		Huang	David	B	Smith
Aya		Hussein	Stephanie	L	Smith
Ibrahim	Anwar	Ibrahim	John	T	Spillane
Andrew		Jack	Peter	L	Storey
John Wade		Kearney	Heidi	B	Stratti
Mansoor	Ali	Khan	Geng		Sun
Arash		Khatamianfar	Robert	Stephen	Terry
Fumihisa		Kimura	Tu		Tu
Arslan		Kiyani	Hoang	Duong	Tuan
Anh Tuyen		Le	Udaya	K	Tupakula
Ki Myung	Brian	Lee	Aditya		Vms
Wanchun		Liu	Simon	Oliver	Wadsworth
John		Livanas	Tianhui		Wang
Brad		Lockhart	Shuo		Wang
Siqi		Ma	Zhiqiang		Wei
Manisha		Manisha	Gregory	Leigh	Wright

Kai	Wu	Jian	Yang
Lin	Wu	Armaghan	Zafar
Andrew	Yager	Shaojun	Zhang
XINZHI	YAN	Qiaoxi	Zhu
Jiajia	Yang		

New Graduate Student Members

We have 112 new graduate student members

Yasmin Nigar		Abdul Rasheed	Hoijoon		Jung
Igbayemi	Daniel	Akeremale	Nanise		Kaloumaira
Muhammad	Mubashir	Alam	Omair		Khan
Balsam		Alkouz	Alva		Kosasih
Reem	Mounzer	Almasri	Kheng		Kua
Azadeh		Arnaz	Hong Quan		Le
Reza		barzegar	Ming		Li
danial		bavi	Qi		Li
Joel		Bottin-Noonan	Wei		Li
Fredo	Paraginog	Chavez	Jizhizi		Li
Marianna		Cheklin	Kunming		Li
Yijun		Chen	Xiangyu		Li
Huajie		Chen	Bo		Li
Yuqian		Chen	Yinyan		Liu
Yifeng		Chen	Chi		Liu
Deming		Chu	Alon		Loeffler
Thai Son		Chu	Claire		McFarland
Jacinta	Dawn	Cleary	Paul	J	Mcmahon
John		Cook	Dillip	kumar	mishra
David		Dai	Pippy		Namana
Xiaocui		Dang	Tien Dung		Nguyen
Ryan Anthony	Jalova	de Belen	Khanh		Nguyen
Prerna		Dhull	Cleary		OBrien-Boots
Yang		Di	Munkhbat		Ochir
Antoni		Dimitriadis	Francis		Odoom
Jihad		El Hajjeh	Vladimir		Pan
Lei		Fan	Amirmohammad		Pasdar
Qingshuai		Feng	Shaetrun		Pathmanathan
Jiayao		Gao	Jiaming		Pei
AMIN		GHARIPOUR	Linh		Pham
Ramtin		Gharleghi	Thomas		Philpott
Cinthia Joy		Godly	Ariastity	Mega	Pratiwi
Jiwei		Guan	Jiwen		Qi
Rel		Guzman	Chen		Qian
David		Hason Rudd	Pradeep		Rajasekaran
Shaokang		Hu	Muhammad	Ahmad	Raza
Sara		Jafarbeiki	Hualin		Ren
Alice		James	Brendan	Anthony	Rogers
Mei		Jiang	Harley		Rutherford

Nazmus		Sakib	Minghao	Wang
Anahita		Setayesh	Shaoshen	Wang
Avishkar		Seth	Jingyao	Wu
Muhammad Ali		Shahid	Jiahao	Xia
Babar		Shahzaad	Haolong	Xiang
Baoling		SHAN	Heng	Xu
Hamish	Peter	Shaw	Zesheng	Ye
Ali		Shojaeipour	Muhammad	Yousaf
Pingyang		Sun	Shiduo	Yu
Axuan		Sun	Tasmia	Zaman
Mingjian		Tang	Sen	Zhang
Joshua	Anthony	Then	Chenhan	Zhang
Zhiyi		Tian	Tao	Zhang
Aron		Turner	shisheng	zhang
Md. Amanath		Ullah	zixu	zhang
Lauren		Veenstra	shuai	zhou
Qiao		Wang	XUHAN	ZUO

New Student Members

We have 58 new student members.

Manav	Vinay	Agarwal	Kevin		Luong
Gargi		Asthana	Nikolai	Jascha	Makaroff
Viren		Bachani	Prakruti		Makwana
Paul		Baird	Zachary	Gordon	Mazzon
Timothy	Andrew	Baker	Malgorzata	Agnieszka	Mika
Joshua	Dayco	Benzon	Nisarg	Kamleshkumar	Modi
Jay		Bhutoria	Brett	Nicholas	Morgan
Angus		Brawley	Graham	Boglon	Mudugem
Isaac	Robert Ian	Brunacci	Sheik Md Kazi		Nazrul Islam
Blake		Burgess	Jonah		Newman
Sergio		coniglio	Anh	Nguyen Mai	Ngo
Olivia		Cupitt	Cornelius	John	Paardekooper
Gregory	John	De Jersey	Adhip		Pandey
Armaan		Dhar	Cory	Jackson	Patten
YIHAO		DING	Jacob		Paull
Keely	Eileen	Dixon	Neil Ian	Parinas	Quisumbing
Timothy		Halstead	Reece	Walter	Reynolds
A B M Mehedi		Hasan	Krish	Ajay	Sakharkar
Quang	Ngoc	Huynh	Rhys		Schmold
Kushal		Jain	Bhavna		Sharma
Umair		KHAN	Vu		Truong
Jesse	Patrick	Lawler	Che-Wei		Tsao
Danaan		Lawton	Hamish	isaac	Tubman
Christopher		Levantis	Netani	Mocelutu Masiqera	Tukana
Yue		Liu	Devashish		Upadhyay

Nikhil	Vasudevan	Lewis	Maxwell	Watts
Owens	Vincentio	Hayden	Kye	Welsh
Rene	Vuljanic	Fan		Wu
Minyang	Wang	Lehan		Yang

New Affiliate Members

We have four of them.

Malith Prasanga Ranaweera Kankanamge, Sumedha Rathmali Weerasekara, Aleem Mohammed and Zhaocheng Huang

New Associate Members

We have two of them.
Chris McLaren and Orsolya Sara Kakesi

Any student members who would like to be on the Student Branch Committees and any members, especially academic staff, who would like to be their mentors, please contact
Arslan Kiyani arslan.kiyani@mq.edu.au (student activities chair) or
bruce.poon@ieee.org (0414 662 766) to register your interest.

There are a number of members who are qualified to be Senior Members.
Also, there are a number of Life Members who are qualified for upgrade to Life Senior Members.
If you are interested in upgrading your membership, please do not hesitate to contact me on 0414 662 766 or by email.

"Membership" for Life members is free. However, you do need to renew it annually.
Renewal is simple & easy and can be done via the IEEE web site.
If you have not renewed your Life Membership, please log onto the IEEE website to do it.
Submitted by Dr. Bruce Poon – e-mail bruce.poon@ieee.org

LEARN WHAT YOU NEED TO KNOW TO EXCEL AS AN ENGINEER

NOW AND INTO THE FUTURE

Great engineers do more than master one discipline. They understand the bigger picture. How other areas intersect.

Engineering Education Australia's new digital learning platform, EEA Online is the most **direct**, **accessible** and **relevant** way to equip you with that knowledge.

It's **direct** because you learn curated insights straight from subject matter experts.

It's **accessible** because you can study anywhere, anytime and at a pace you choose.

It's **relevant** because you're being trained in leading-edge practices with a real-world context.

COURSES

- AS/NZS 3000 – The Wiring Rules
- Contract Foundations
- Enhancing Project Performance
- Introduction to the Building Code of Australia
- Project Planning, Scheduling and Control
- Risk in Engineering
- Safety in Design
- Solar Battery Storage
- Solar Power System Fundamentals
- Starting in the Australian Engineering Workplace
- Systems Thinking in Engineering
- The Engineering and Design Lifecycle

START LEARNING TODAY

eea.org.au/eea-online

10% OFF
FOR IEEE NSW CHAPTER MEMBERS

USE THE CODE:
IEEENSW2022

ENGINEERS AUSTRALIA

EEA ONLINE
An Engineers Australia Business

Circuit is currently provided electronically from the IEEE NSW Section web site

https://site.ieee.org/nsw/newsletters/

Members will be notified by email when a new issue is posted on the Website. Future copies of **Circuit** will only be sent by paper mail on request.

If you require Circuit to be mailed to you in 2022 please complete the form below:
Don't bother if you were already getting it by mail in 2021.

Please Detach

Yes, I want to continue receiving future editions of *Circuit* by post

Name: .....
Member No: .....
Address: ..... Postcode: ……..
Tel:
(H)…… (W)……..... (M)…….…….. FAX……..
Email: .....
Post to: Bill Sloman, **Circuit Editor, Unit 60, 1Tewkesbury Avenue, Darlinghurst NSW 2010**

ADAMS PLUCK
Patent & Trade Mark Attorneys

Patents | Trade Marks | Designs

View our attorney profiles at:

www.adamspluck.com.au

Phone us on 02 9476 0477 to discuss your IP requirements

Building Business Assets

Suite 3, Level 1, 20 George Street Hornsby NSW 2077 Fax: 02 9987 2405 E: email@adamspluck.com.au